VIEW1 (1 : 2,5)

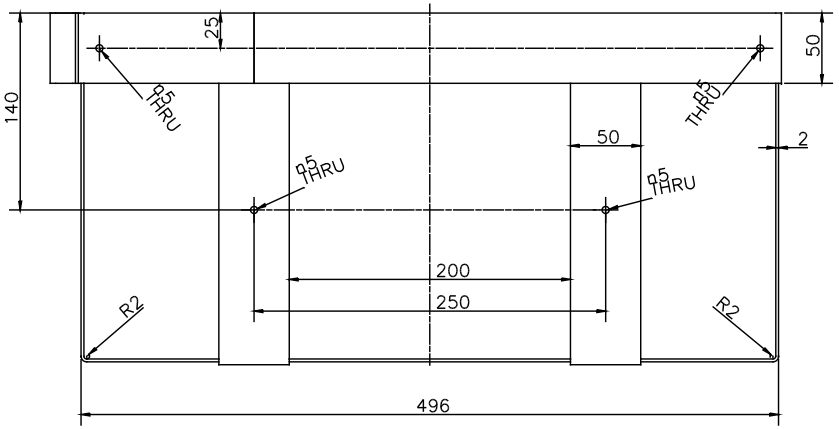

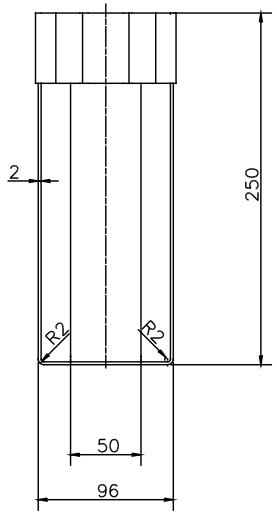

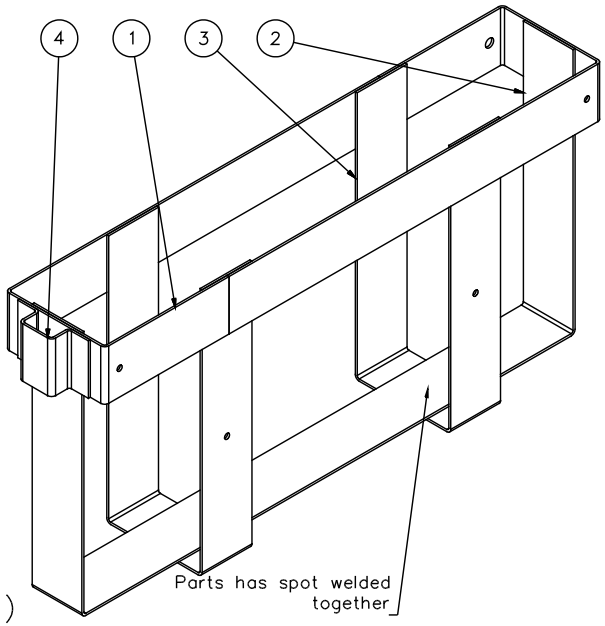

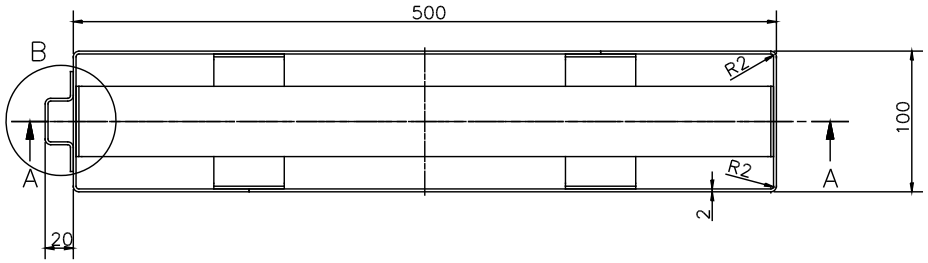

B (1 : 1)

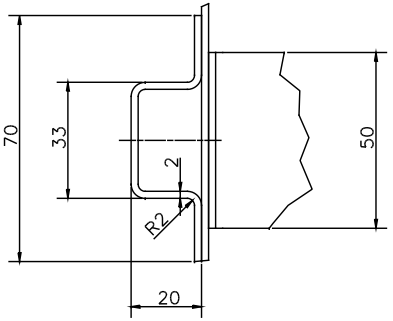

A–A (1 : 2,5)

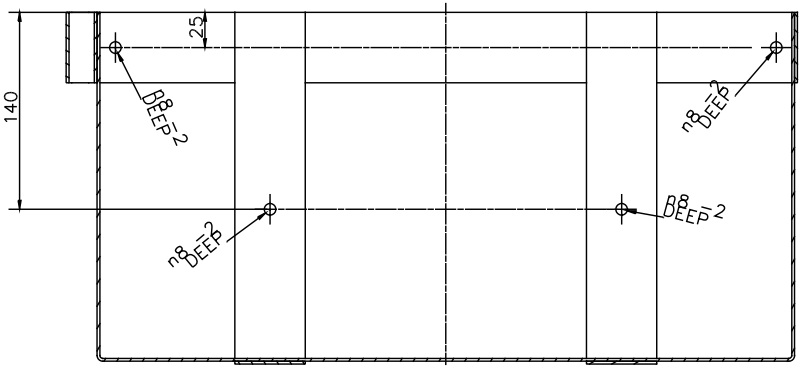

PARTS LIST

ITEM	QTY	PART NUMBER	DESCRIPTION
1	2	Top edge plate	2x50–593
2	1	Long bottom plate	2x50–985
3	2	Short bottom plate	2x50–589
4	1	Bracket plate	2x50–101

VIKING LIFE-SAVING EQUIPMENT

Scale: 1:10

Dim. in: mm

Drawn.: IHE

Check.:

Retangular hose bag

Drawing no.: Retangular hose bag

CAD Nr.: